LED Moving Head

16pcs 15W RGBW 4-in-1

IP20 LED ---0.2m t_a 40°C t_c 150°C

User Manual

KEEP THIS MANUAL FOR FUTURE NEEDS

1. Unpacking

Thank you for choosing our products. For your own safety, please read this manual before installing the device. This manual covers the important information on installation and applications. Please install and operate the fixture with following instructions. Meanwhile, please keep this manual well for future needs.

This fixture is made of a new type of high temperature strength of engineering plastics and cast aluminum casing with nice outlook. The fixture is designed and manufactured strictly following CE standards, complying with international standard DMX512 protocol. It's available independently controlled and linkable with each other for operation. And it is applicable for large-scale live performances, theater, studio, nightclubs and discos.

4-IN-1 LEDs(RGBW) which features high brightness and stability. Please carefully unpack it when you receive the fixture and check whether it is damaged during the transportation. And please check whether the following items are included inside the box:

Moving Head---------One Signal Cable----One

Hanging Bracket-----Two Power Cable----One

User Manual----One

8. Maintenance and Cleaning

The following points have to be considered during the inspection:

1. All screws for installing the devices or parts of the device have to be tightly connected and must not be corroded. 2. There must not be any deformations on the housing, color lenses, fixations and installation spots (ceiling, suspension, trussing). 3. Mechanically moved parts must not show any traces of wearing and must not rotate with unbalances. 4. The electric power supply cables must not show any damage, material fatigue or sediments.

Further instructions depending on the installation spot and usage have to be adhered by a skilled installer and any safety problems have to be removed.

CAUTION!

Disconnect from mains before starting maintenance operation.

In order to make the lights in good condition and extend the life time, we suggest a regular cleaning to the lights.

1) Clean the inside and outside lens each week to avoid the weakness of the lights due to accumulation of dust.

2) Clean the fan each week.

3) A detailed electric check by approved electrical engineer each three month, make sure that the circuit contacts are in good condition, prevent the poor contact of circuit from overheating.

We recommend a frequent cleaning of the device. Please use a moist, lint- free cloth. Never use alcohol or solvents. There are no serviceable parts inside the device. Please refer to the instructions under "Installation instructions". Should you need any spare parts, please order genuine parts from your local dealer

7. Key Features

Voltage: AC90-260V,50-60Hz

Power: 280W

Led source: 16pcs 15W RGBW 4-in-1 LEDs

Channel: 18/30/82 three channels modes

Control: DMX/Master-slave/Auto/Sound activated

Pan: Unlimited+16 bit fine

Tilt: Unlimited+16 bit fine

Beam angle: 3°

Dimmer: 0-100% linear dimming

Strobe: 0-25 Hz

Packing size: 54*39*55 cm (2pcs/ctn)

NW: 15 KG (2pcs/ctn)

GW: 20 KG (2pcs/ctn)

Function

1. Each LED controllable individually to bring more options designing.
2. Super fast unlimited Pan/Tilt movement to bring more dynamic effect.
3. Super low noise with as many as 82 channels to bring an unprecedented experience.
4. The excellent beam and effect light for big event and high level club, bar, etc.

2. Safety Instructions

CAUTION!
Be careful with your operations.With a dangerous voltage you can Suffer a dangerous electric shock when touching wires!

This device has left the factory in perfect condition. In order to maintain this condition and to ensure a safe operation, it is absolutely necessary for the user to follow the safety instructions and warning notes written in this user manual.

Important:
Damages caused by the disregard of this user manual are not subject to warranty. The dealer will not accept liability for any resulting defects or problems.

If the device has been exposed to temperature changes due to environmental changes, do not switch it on immediately. The arising condensation could damage the device. Leave the device switched off until it has reached room temperature.

This device falls under protection-class I. Therefore it is essential that the device be earthed.

The electric connection must carry out by qualified person.

The device shall only be used with rate voltage and frequency.

Make sure that the available voltage is not higher than stated at the end of this manual.

Make sure the power cord is never crimped or damaged by sharp edges. If this would be the case, replacement of the cable must be done by an authorized dealer.

Always disconnect from the mains, when the device is not in use or before cleaning it. Only handle the power cord by the plug. Never pull out the plug by tugging the power cord.

During initial start-up some smoke or smell may arise. This is a normal process and does not necessarily mean that the device is defective, it should decrease gradually.

Please don't project the beam onto combustible substances.

Fixtures cannot be installed on combustible substances, keep more than 50cm distance with wall for smooth air flow, so there should be no shelter for fans and ventilation for heat radiation.

If the external flexible cable or cord of this luminaire is damaged, it shall be exclusively replaced by the manufacturer or his service agent or a similar qualified person in order to avoid a hazard.

3.Operation Instructions

-The moving head is for beam effect purpose.

-Don't turn on the fixture if it's been through severe temperature difference like after transportation because it might damage the light due to the environment changes. So make sure to operate the fixture until it is in normal temperature.

-This light should be keep away from strong shaking during any transportation or movement.

-Don't pull up the light by only the head, or it might cause damages to the mechanical parts.

-Don't expose the fixture in overheat, moisture or environment with too much dust when installing it. And don't lay any power cables on the floor. Or it might cause electronic shock to the people.

-Make sure the installation place is in good safety condition before installing the fixture.

-Make sure to put the safety chain and check whether the screws are screwed properly when installing the fixture.

-Make sure the lens are in good condition. It's recommended to replace the units if there are any damages or severe scratch.

-Make sure the fixture is operated by qualified personnel who knows the fixture before using.

-Keep the original packages if any second shipment is needed.

-Don't try to change the fixtures without any instruction by the manufacturer or the appointed repairing agencies.

-It is not in warranty range if there are any malfunctions from not following the user manual to operate or any illegal operation, like shock short circuit, electronic shock, lamp broke, etc.

4. Mounting and Installation

Cautions: For added protection mount the fixtures in areas outside walking paths, seating areas, or in areas were the fixture might be reached by unauthorized personnel.

Before mounting the fixture to any surface, make sure that the installation area can hold a minimum point load of 10 times the device's weight.

Fixture installation must always be secured with a secondary safety attachment, such as an appropriate safety cable.

82 Channels mode

CH	Function	value	Details
1	Pan	0-255	Pan movement
2	Pan fine	0-255	Pan fine
3	Unlimited Pan movement	0-55	Tilt non movement
		56-155	Pan unlimited clockwise rotate slow to fast
		156-255	Pan unlimited reversely rotate slow to fast
4	Tilt	0-255	Tilt movement
5	Tilt fine	0-255	Tilt fine
6	Unlimited Tilt movement	0-55	Pan non movement
		56-155	Tilt unlimited clockwise rotate slow to fast
		156-255	Tilt unlimited reversely rotate slow to fast
7	Pan/Tilt speed	0-255	From fast to slow
8	Dimmer	0-255	Linear dimmer from dark to bright
9	Strobe	0-3	No function
		4-200	Strobe with the same step from slow to fast
		201-255	Random strobe
10	R dimmer	0-255	Red dimmer from dark to bright
11	G dimmer	0-255	Green dimmer from dark to bright
12	B dimmer	0-255	Blue dimmer from dark to bright
13	W dimmer	0-255	White dimmer from dark to brigh
14	Static effect show	0-9	No function
		10-255	Static effect show
15	Dynamic effect show	0-9	No function
		10-255	Dynamic effect show
16	Speed of effect (Operate against 15CH)	0-127	Effect speed control from left to right
		128-255	Effect speed control from right to left
17	Macro Function	0-49	No function
		50-99	Auto run 1
		100-149	Auto run 2
		150-199	Auto run 3
		200-255	Sound activated
18	Reset	0-250	No function
		251-255	Reset within 5 seconds
19	LED 1 R dimmer	0-255	LED 1 Red 0-100% dimmer from dark to bright
20	LED 1 G dimmer	0-255	LED 1 Green 0-100% dimmer from dark to bright
21	LED 1 B dimmer	0-255	LED 1 Blue 0-100% dimmer from dark to bright
22	LED 1 W dimmer	0-255	LED 1 White 0-100% dimmer from dark to bright
23	LED 2 R dimmer	0-255	LED 2 Red 0-100% dimmer from dark to bright
24	LED 2 G dimmer	0-255	LED 2 Green 0-100% dimmer from dark to bright
25	LED 2 B dimmer	0-255	LED 2 Blue 0-100% dimmer from dark to bright
26	LED 2 W dimmer	0-255	LED 2 White 0-100% dimmer from dark to bright
....	…….	……	.....
....	…….	……	.....
79	LED 16 R dimmer	0-255	LED 16 Red 0-100% dimmer from dark to bright
80	LED 16 G dimmer	0-255	LED 16 Green 0-100% dimmer from dark to bright
81	LED 16 B dimmer	0-255	LED 16 Blue 0-100% dimmer from dark to bright
82	LED 16 W dimmer	0-255	LED 16 White 0-100% dimmer from dark to bright

30 channels mode

CH	Function	value	Details
1	Pan	0-255	Pan movement
2	Pan fine	0-255	Pan fine
3	Unlimited Pan movement	0-55	Tilt non movement
		56-155	Pan unlimited clockwise rotate slow to fast
		156-255	Pan unlimited reversely rotate slow to fast
4	Tilt	0-255	Tilt movement
5	Tilt fine	0-255	Tilt fine
6	Unlimited Tilt movement	0-55	Pan non movement
		56-155	Tilt unlimited clockwise rotate slow to fast
		156-255	Tilt unlimited reversely rotate slow to fast
7	Pan/Tilt speed	0-255	From fast to slow
8	Dimmer	0-255	Linear dimmer from dark to bright
9	Strobe	0-3	No function
		4-200	Strobe with the same step from slow to fast
		201-255	Random strobe
10	Line 1 R dimmer	0-255	Line 1 Red 0-100% dimmer from dark to bright
11	Line 1 G dimmer	0-255	Line 1 Green 0-100% dimmer from dark to bright
12	Line 1 B dimmer	0-255	Line 1 Blue 0-100% dimmer from dark to bright
13	Line 1 W dimmer	0-255	Line 1 White 0-100% dimmer from dark to brigh
14	Line 2 R dimmer	0-255	Line 2 Red 0-100% dimmer from dark to bright
15	Line 2 G dimmer	0-255	Line 2 Green 0-100% dimmer from dark to bright
16	Line 2 B dimmer	0-255	Line 2 Blue 0-100% dimmer from dark to bright
17	Line 2 W dimmer	0-255	Line 2 White 0-100% dimmer from dark to brigh
18	Line 3 R dimmer	0-255	Line 3 Red 0-100% dimmer from dark to bright
19	Line 3 G dimmer	0-255	Line 3 Green 0-100% dimmer from dark to bright
20	Line 3 B dimmer	0-255	Line 3 Blue 0-100% dimmer from dark to bright
21	Line 3 W dimmer	0-255	Line 3 White 0-100% dimmer from dark to brigh
22	Line 4 R dimmer	0-255	Line 4 Red 0-100% dimmer from dark to bright
23	Line 4 G dimmer	0-255	Line 4 Green 0-100% dimmer from dark to bright
24	Line 4 B dimmer	0-255	Line 4 Blue 0-100% dimmer from dark to bright
25	Line 4 W dimmer	0-255	Line 4 White 0-100% dimmer from dark to brigh
26	Static effect show	0-9	No function
		10-255	Static effect show
27	Dynamic effect show	0-9	No function
		10-255	Dynamic effect show
28	Speed of effect (Operate against 27CH)	0-127	Effect speed control from left to right
		128-255	Effect speed control from right to left
29	Macro Function	0-49	No function
		50-99	Auto run 1
		100-149	Auto run 2
		150-199	Auto run 3
		200-255	Sound activated
30	Reset	0-250	No function
		251-255	Reset within 5 seconds

Never stand directly below the device when mounting, removing, or servicing the fixture from a periodic safety inspection of all installation material and the fixture. If you lack these qualifications, do not attempt the installation yourself. Improper installation can result in bodily injury.

Be sure to complete all rigging and installation procedures before connecting the main power cord to the appropriate wall outlet.

Clamp Mounting: The Fixture provides a unique mounting bracket assembly that integrates the bottom of the base, the included “Omega Bracket,” and the safety cable rigging point in one unit (see the illustration below). When mounting this fixture to truss be sure to secure an appropriately rated clamp to the included omega bracket using a M10 screw fitted through the center hole of the “omega bracket”. As an added safety measure be sure to attached at least one properly rated safety cable to the fixture using on of the safety cable rigging point integrated in the base assembly

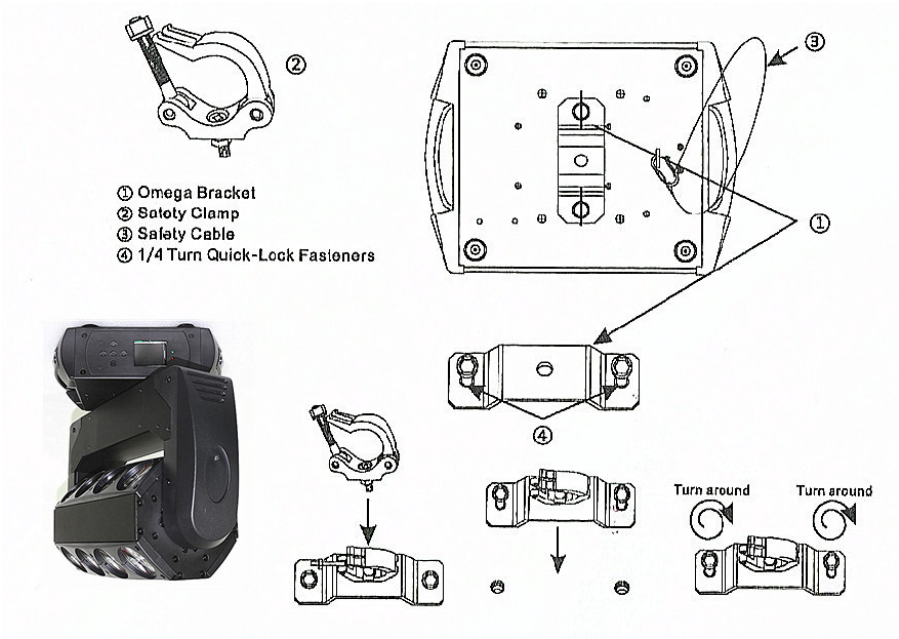

Regardless of the rigging option you choose for our LED Fantastic Roller , always be sure to secure your fixture with a safety cable. The fixture provides a built-in rigging point for a safety cable on the hanging bracket as illustrated above. Be sure to only use the designated rigging point for the safety cable and never secure a safety cable to a carrying handle.

5. Menu Operations

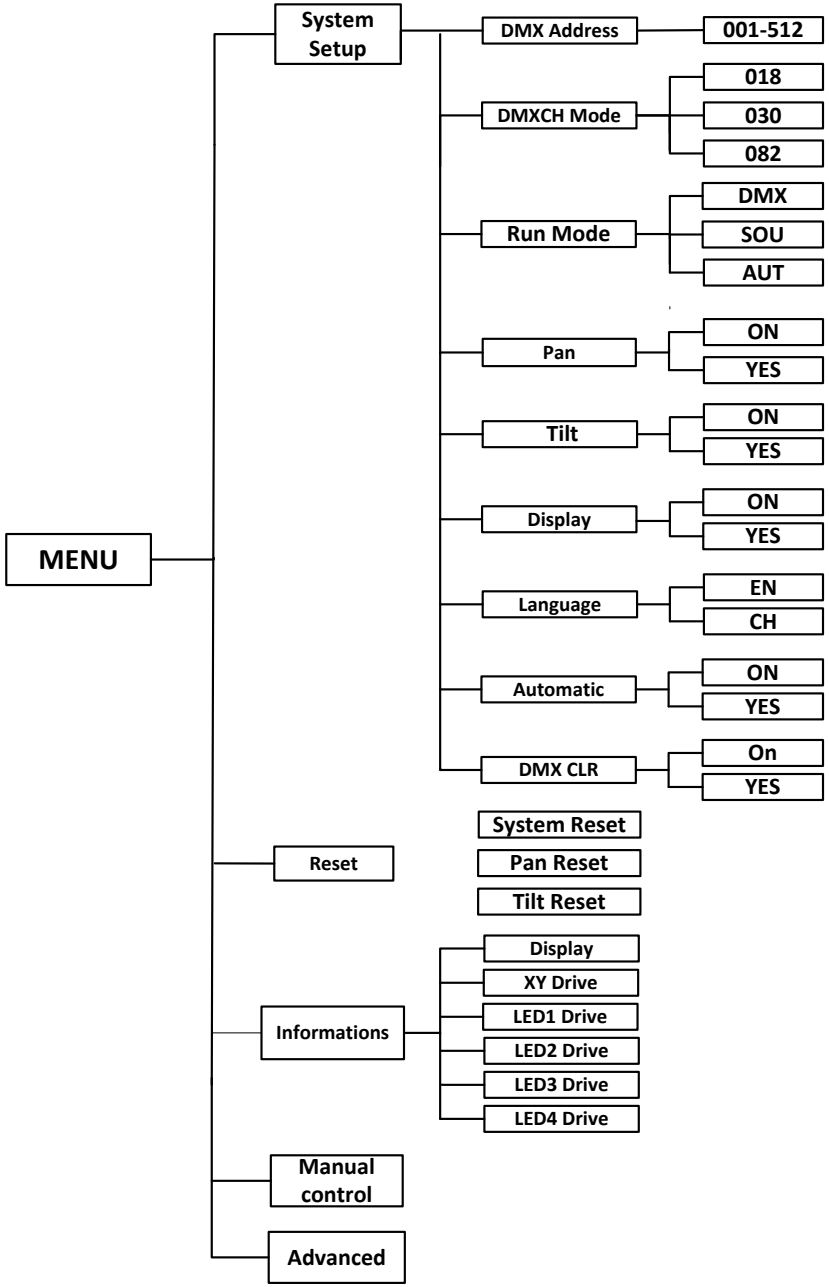

6.DMX channels

18 channel mode

CH	Function	value	Details
1	Pan	0-255	Pan movement
2	Pan fine	0-255	Pan fine
3	Unlimited Pan movement	0-55	Tilt non movement
		56-155	Pan unlimited clockwise rotate slow to fast
		156-255	Pan unlimited reversely rotate slow to fast
4	Tilt	0-255	Tilt movement
5	Tilt fine	0-255	Tilt fine
6	Unlimited Tilt movement	0-55	Pan non movement
		56-155	Tilt unlimited clockwise rotate slow to fast
		156-255	Tilt unlimited reversely rotate slow to fast
7	Pan/Tilt speed	0-255	From fast to slow
8	Dimmer	0-255	Linear dimmer from dark to bright
9	Strobe	0-3	No function
		4-200	Strobe with the same step from slow to fast
		201-255	Random strobe
10	R dimmer	0-255	Red dimmer from dark to bright
11	G dimmer	0-255	Green dimmer from dark to bright
12	B dimmer	0-255	Blue dimmer from dark to bright
13	W dimmer	0-255	White dimmer from dark to brigh
14	Static effect show	0-9	No function
		10-255	Static effect show
15	Dynamic effect show	0-9	No function
		10-255	Dynamic effect show
16	Speed of effect (Operate against 15CH)	0-127	Effect speed control from left to right
		128-255	Effect speed control from right to left
17	Macro Function	0-49	No function
		50-99	Auto run 1
		100-149	Auto run 2
		150-199	Auto run 3
		200-255	Sound activated
18	Reset	0-250	No function
		251-255	Reset within 5 seconds